HITACHI

LIST NO. E831

ELECTRIC TOOL PARTS LIST

■ CORDLESS DRIVER DRILL

1988·9·20

Model ABS-96 (C 0100)

ABS-96(E1)

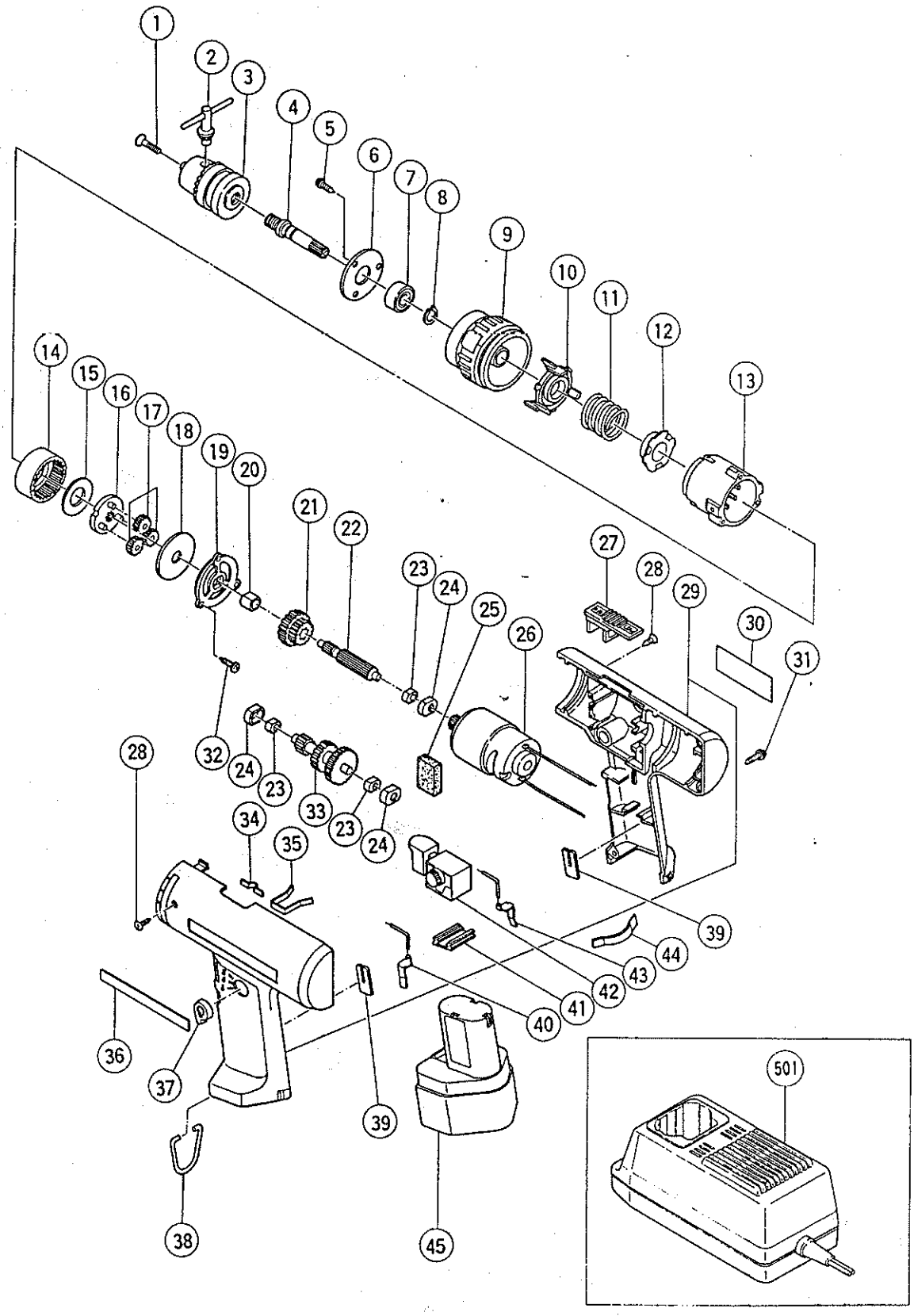

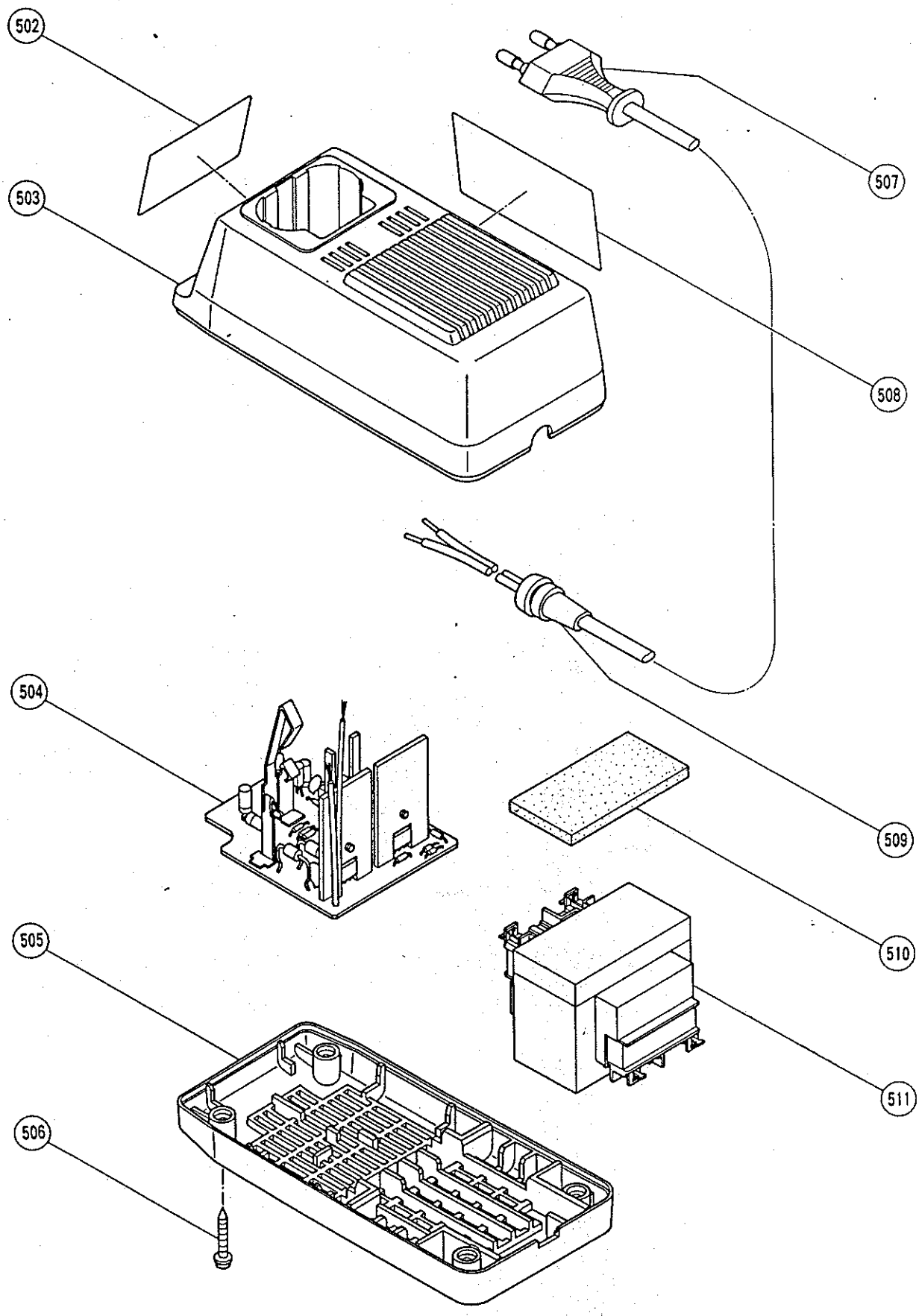
502
503
507
508
504
509
510
505
511
506

ITEM NO.	CODE NO.	DESCRIPTION	NO. USED	REMARKS	
1	992—077	FLAT HD. SCREW (LEFT HAND) M5X17	1		
2	980—057	CHUCK WRENCH 10TL2	1		
3	950—292	DRILL CHUCK 10TLRA	1	INCLUD.2	
4	991—652	SPINDLE (B)	1		
5	984—327	TAPPING SCREW (W/SP.WASHER) D3X8	3		
6	991—663	PLATE	1		
7	600—0VV	BALL BEARING 6000VVCMPS2S	1		
8	939—540	RETAINING RING FOR D10 SHAFT (10 PCS.)	1		
9	991—576	CAP	1		
10	991—575	SPRING HOLDER	1		
11	991—658	SPRING	1		
12	984—308	RATCHET	1		
13	991—573	CASE	1		
14	991—655	RING GEAR	1		
15	991—657	THRUST PLATE (B)	1		
16	991—654	GEAR HOLDER	1		
17	991—653	IDLE GEAR (3 PCS.)	1		
18	991—656	THRUST PLATE (A)	1		
19	991—660	END BRACKET	1		
20	954—011	METAL	1		
21	991—649	SECOND GEAR	1		
22	991—651	SPINDLE (A)	1		
23	997—752	METAL	3		
24	991—650	METAL HOLDER	3		
25	980—572	CUSHION (A)	1		
26	997—740	MOTOR	1		
27	991—664	SHIFT KNOB	1		
28	984—319	FLAT HD. TAPPING SCREW D3X8	2		
29	301—571	HOUSING ASS'Y	1	INCLUD.39	
30		NAME PLATE	1		
31	991—672	TAPPING SCREW (W/WASHER) D3X16	5		
32	984—328	TAPPING SCREW (W/WASHER) D3X12	3		
33	991—648	SECOND PINION	1		
34	980—829	SHIFT SPRING	1		
35	991—665	KEY HOLDER	1		
36		LABEL	1		
37	984—334	SWITCH LEVER	1		
38	980—838	HOOK	1		
39	995—938	FIBER PLATE	2		
40	995—473	TERMINAL	1		
41	991—666	TERMINAL SUPPORT	1		
42	982—456	SWITCH (2P SOLDER TYPE) W/O LOCK	1		
43	991—668	TERMINAL	1		
44	991—669	HOUSING CLIP	1		
45	301—570	BATTERY EB 9	1		

STANDARD ACCESSORIES

ITEM NO.	CODE NO.	DESCRIPTION	NO. USED	REMARKS	
501		CHARGER(MODEL UC 12Y)	1	INCLUD.502—511	
502		NAME PLATE	1		
503	301—572	CASE(A)	1		
504	300—035	PRINTED CIRCUIT BOARD	1		
505	301—573	CASE(B)	1		
506	300—036	TAPPING SCREW D3X20	4		
507	980—642Z	CORD	1		
508		CAUTION PLATE	1		
509	991—167	CORD ARMOR	1		
510	982—490	CUSHION (A)	1		
511	300—031	TRANSFORMER 220V	1		

09—88